Advanced AC Circuit

Sinusoidal Steady-State Circuits

Sinusoidal Steady-State Circuit Analysis

- Phasor Analysis for Complex Circuits
- AC Circuit Power Analysis

  Maximum Power Transfer
- Three phase Circuit

Review： Sinusoidal Signal and Phasor

The expressions of a phasor

$$i(t) = I_m \cos(\omega t + \varphi) \Longleftrightarrow \text{phasor } \dot{I}_m$$

Exponential form $\dot{I}_m = I_m e^{j\varphi}$

Polar form $\dot{I}_m = I_m \angle \varphi$

Rectangular form $\dot{I}_m = I_m \cos\varphi + jI_m \sin\varphi$

$$I_m \sin(\omega t + \varphi) \Longleftrightarrow \dot{I}_m = I_m \angle \varphi - 90° = -jI_m \angle \varphi$$

Phasor Diagram

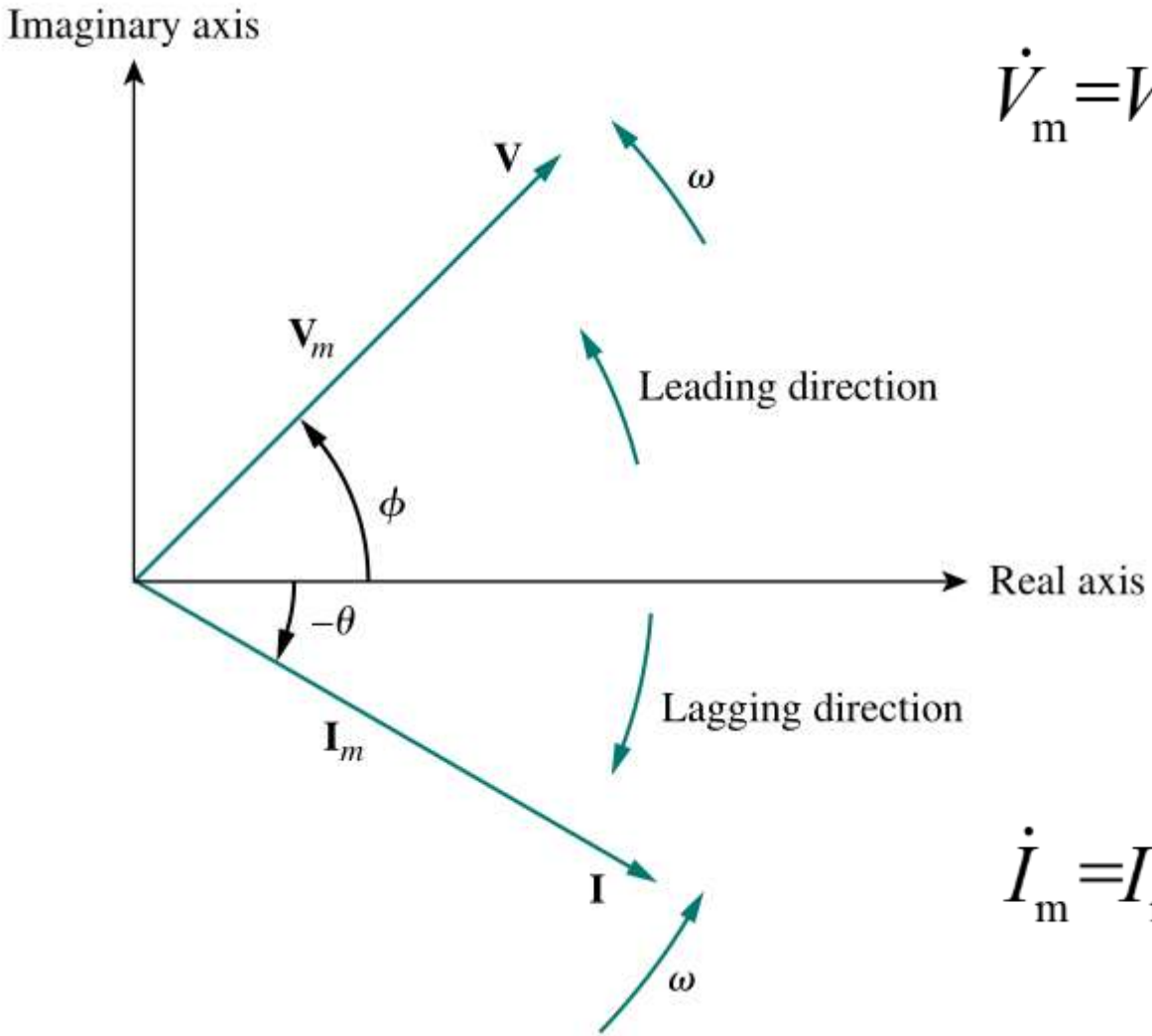

$$\dot{V}_m = V_m \angle \varphi$$

$$\dot{I}_m = I_m \angle -\theta$$

Review： Phasor Forms for KL & VAR

$$\sum \dot{I}_k = 0 \qquad \sum \dot{V}_k = 0$$

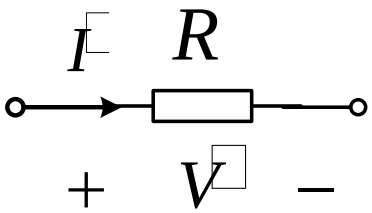

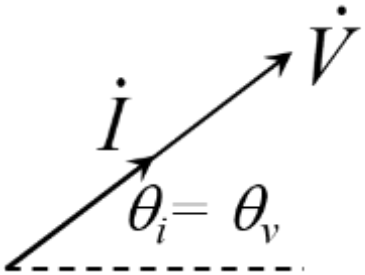

$$\dot{V} = R\dot{I}$$

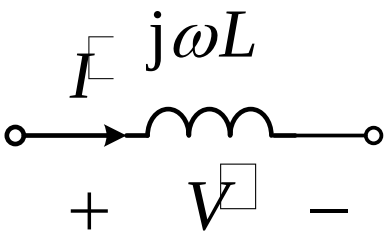

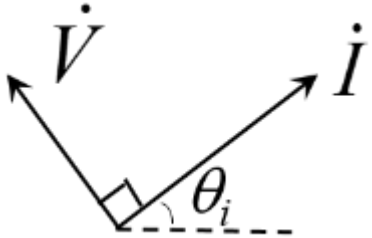

$$\dot{V} = \mathrm{j}\omega L\dot{I}$$

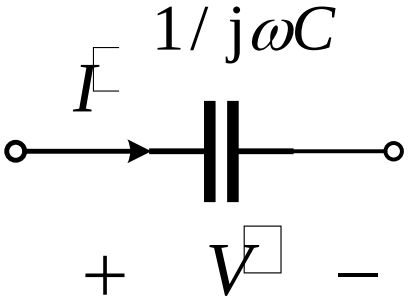

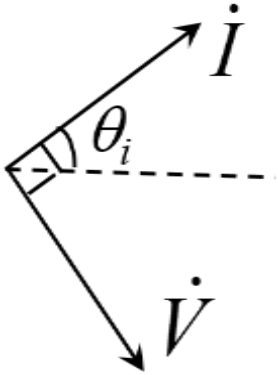

$$\dot{V} = -\mathrm{j}\frac{1}{\omega C}\dot{I}$$

Review：Impedance and Admittance

Impedance $Z = \dfrac{\dot{V}}{\dot{I}}$ **Admittance** $Y = \dfrac{\dot{I}}{\dot{V}}$

Resistor： $Z_{\mathrm{R}} = R$ $Y_{\mathrm{R}} = \dfrac{1}{R}$

Inductor： $Z_{\mathrm{L}} = \mathrm{j}\omega L$ $Y_{\mathrm{L}} = \dfrac{1}{\mathrm{j}\omega L}$

Capacitor： $Z_{\mathrm{C}} = \dfrac{1}{\mathrm{j}\omega C}$ $Y_{\mathrm{C}} = \mathrm{j}\omega C$

Phasor Analysis

Condition

Linear steady-state AC circuit excited by solo frequency sources

Analysis Tool

(1) Basic circuit laws (Ohm's and Kirchhoff's) apply to AC circuits in the same manner as they do for DC circuits

(2) The techniques developed in DC circuits all apply to AC circuit analysis.

(3) Phasor diagram can be used as a help.

Steps for steady-state AC circuit phasor analysis

(1) Transform the circuit to the phasor or frequency domain.

(2) Solve the problem using circuit techniques (nodal analysis, mesh analysis, superposition, etc.).

(3) Transform the resulting phasor to the time domain

Nodal Analysis

Example **Find** $\dot{V}_1$ **and** $\dot{V}_2$

Solution:

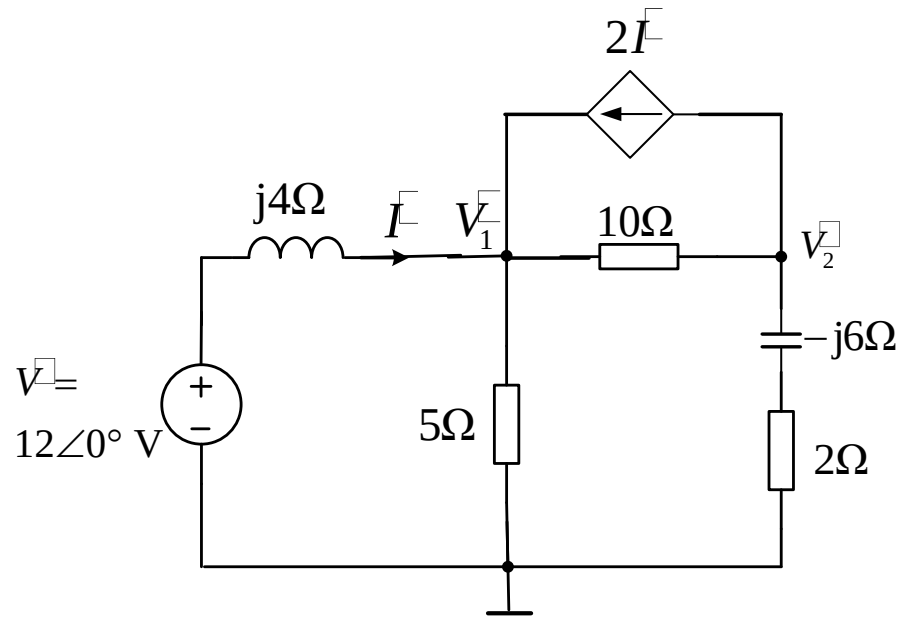

$$\begin{cases} \left(\frac{1}{10}+\frac{1}{5}-\mathrm{j}\frac{1}{4}\right)\dot{V}_1-\frac{1}{10}\dot{V}_2=\frac{\dot{V}}{\mathrm{j}4}+2\dot{I} \\ -\frac{1}{10}\dot{V}_1+\left(\frac{1}{10}+\frac{1}{2-\mathrm{j}6}\right)\dot{V}_2=-2\dot{I} \\ \dot{I}=(\dot{V}-\dot{V}_1)/\mathrm{j}4 \end{cases}$$

$$\begin{cases} (6-\mathrm{j}15)\dot{V}_1-2\dot{V}_2=-\mathrm{j}180 \\ (-2+\mathrm{j}10)\dot{V}_1+(3+\mathrm{j}3)\dot{V}_2=\mathrm{j}120 \end{cases}$$

$$\dot{V}_1=9.62-\mathrm{j}3.94=10.4\angle-22.3^\circ\ (\mathrm{V})$$

$$\dot{V}_2=-1.38-\mathrm{j}77.94=77.95\angle-123.5^\circ\ (\mathrm{V})$$

Ex. A steady-state AC circuit is shown below, find $v(t)$.

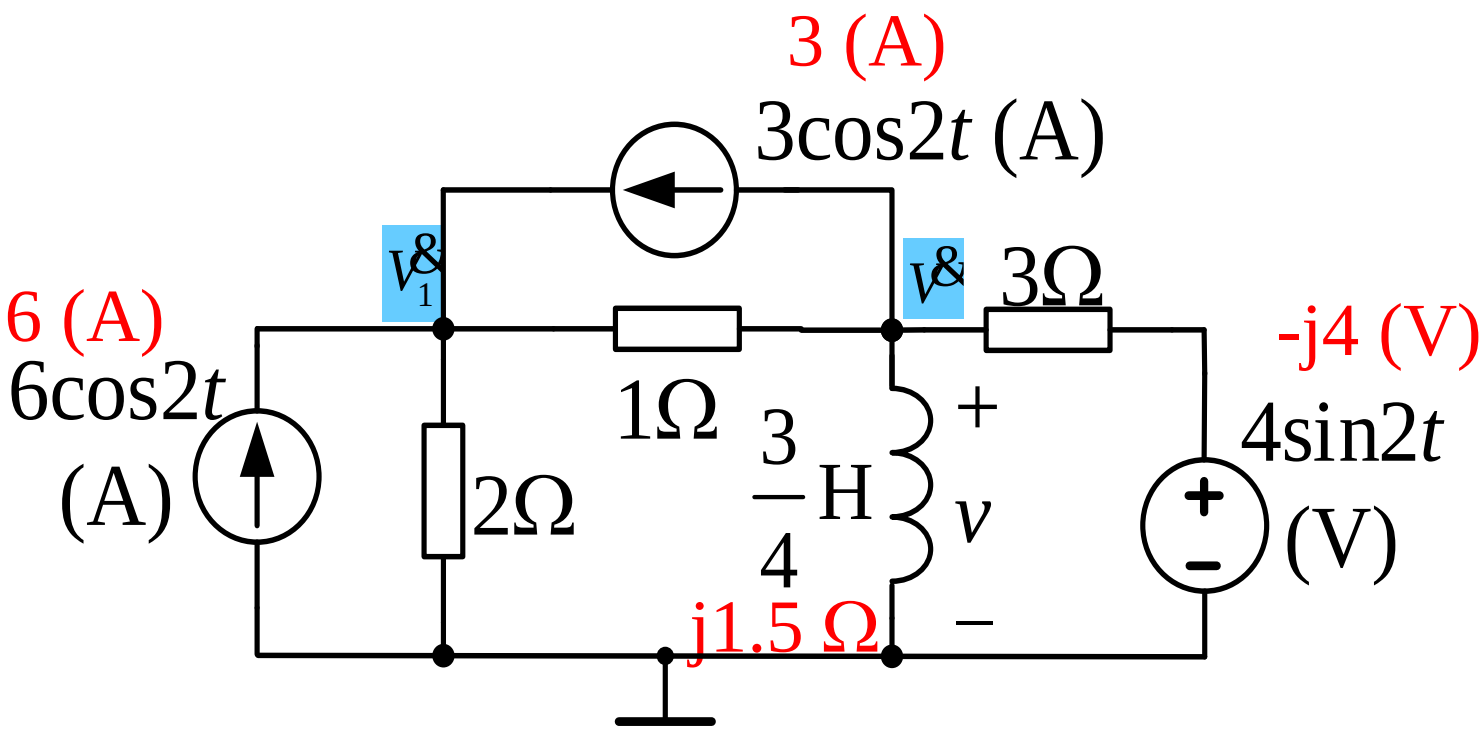

$$(\frac{1}{2}+1)\dot{V}_{1m}-\dot{V}_m=6+3$$

$$-\dot{V}_{1m}+(\frac{1}{j1.5}+\frac{1}{3}+1)\dot{V}_m=-3-j\frac{4}{3}$$

$$\dot{V}_m=3.25+j1.25=3.48\angle 21^\circ \text{ (V)}$$

$$v(t)=3.48\cos(2t+21^\circ) \text{ (V)}$$

Linear Circuits **Example**

Linear steady-state AC circuit given frequency $\omega = 1000$ rad/s

Determine the input impedance seen from the voltage source.

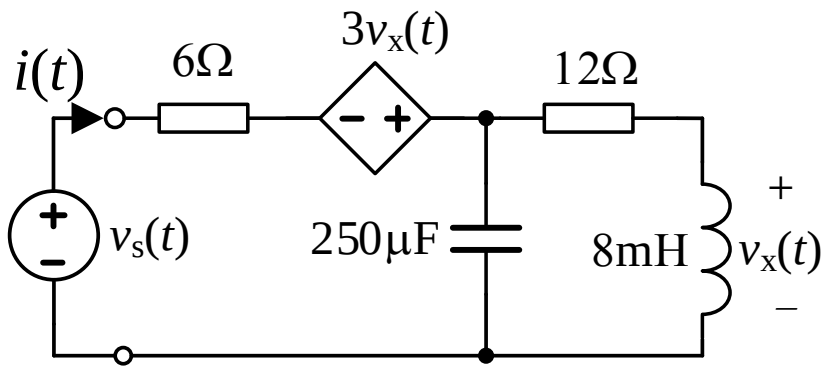

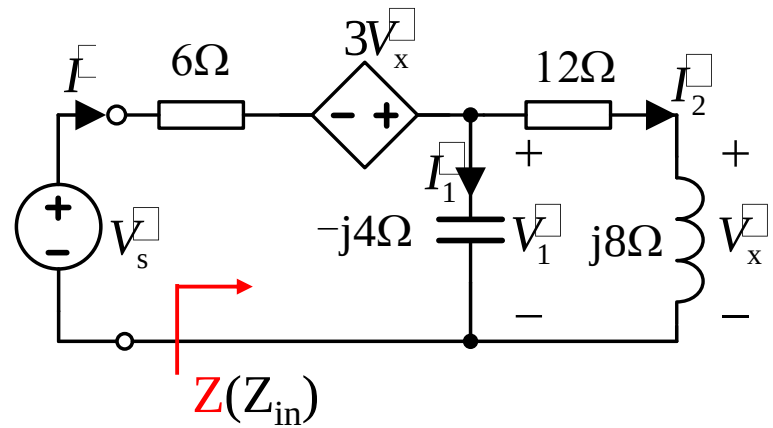

Assume $\dot{I}_2 = 1\angle 0°(\mathrm{A})$

$$\dot{V}_x = \mathrm{j}8\dot{I}_2 = \mathrm{j}8$$

$$\dot{V}_1 = (12 + \mathrm{j}8)\dot{I}_2 = 12 + \mathrm{j}8$$

$$\dot{I}_1 = \dot{V}_1 / (-\mathrm{j}4) = -2 + \mathrm{j}3$$

$$\dot{I} = \dot{I}_1 + \dot{I}_2 = -1 + \mathrm{j}3$$

$$\dot{V}_s = 6\dot{I} - 3\dot{V}_x + \dot{V}_1 = 6 + \mathrm{j}2$$

$$Z = \dot{V}_s / \dot{I} = -\mathrm{j}2(\Omega)$$

Exercise: Using nodal and mesh analysis find $\dot{V}_a$ and $\dot{V}_c$.

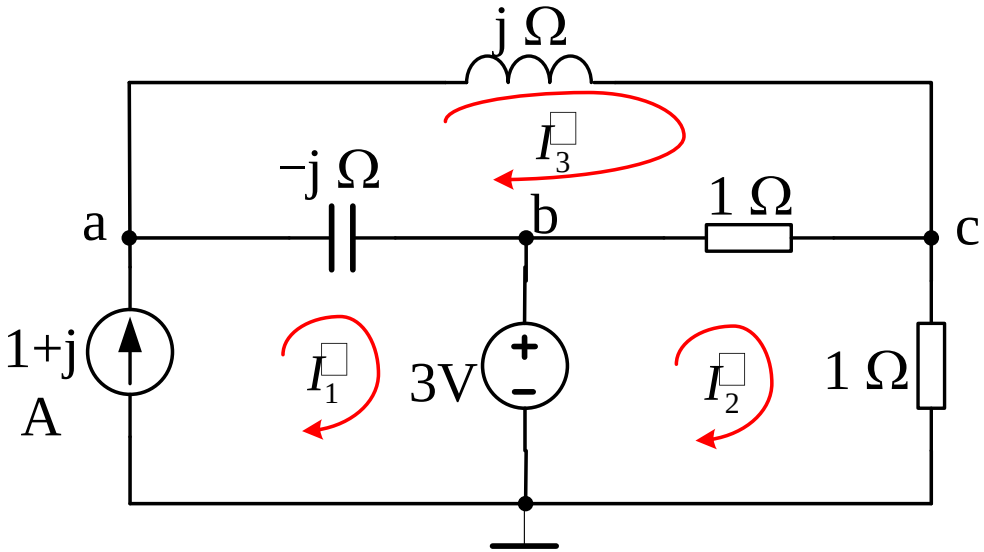

Nodal analysis:

$$\begin{cases} (\frac{1}{j}+\frac{1}{-j})\dot{V}_a-\frac{1}{-j}\dot{V}_b-\frac{1}{j}\dot{V}_c=1+j \\ \dot{V}_b=3 \\ -\frac{1}{j}\dot{V}_a-\dot{V}_b+(1+1+\frac{1}{j})\dot{V}_c=0 \end{cases}$$

$$\begin{cases} \dot{V}_c=4-j \\ \dot{V}_a=6+j4 \end{cases}$$

Mesh analysis:

$$\begin{cases} \dot{I}_1=1+j \\ 2\dot{I}_2-\dot{I}_3=3 \\ (1+j-j)\dot{I}_3-(-j)\dot{I}_1-\dot{I}_2=0 \end{cases}$$

$$\begin{cases} \dot{I}_1=1+j \\ \dot{I}_2=4-j \\ \dot{I}_3=5-2j \end{cases}$$

$$\begin{cases} \dot{V}_c=1\times\dot{I}_2=4-j \\ \dot{V}_a=j\dot{I}_3+\dot{V}_c=6+j4 \end{cases}$$

Thevenin and Norton Equivalent Circuits

Example **Apply Thevenin theorem to find $v(t)$.**

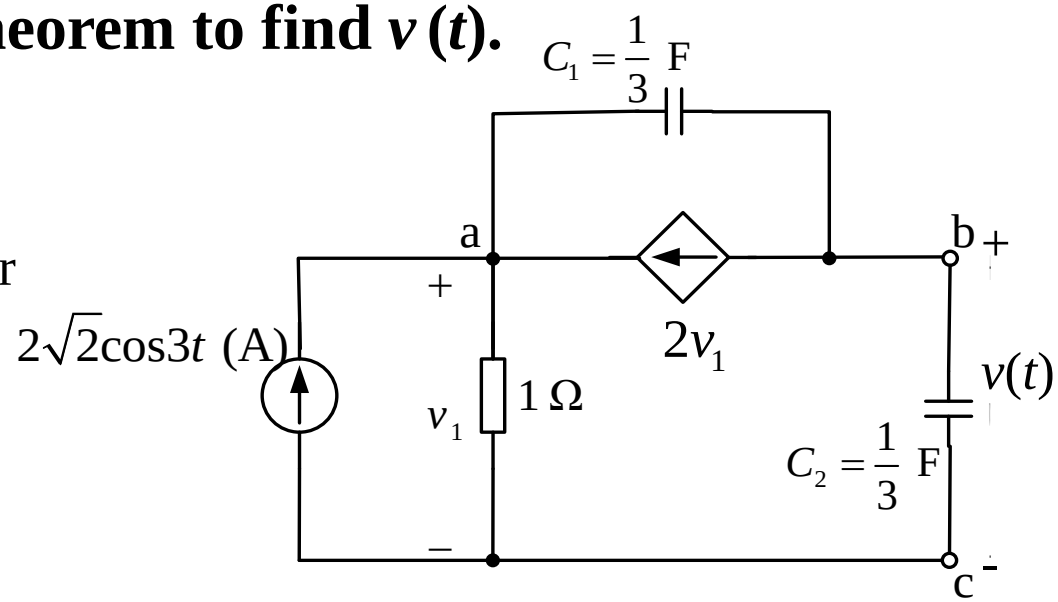

Solution:

1. Transform the circuit to the phasor or frequency domain.

2. Find $\dot{V}_{OC}$.

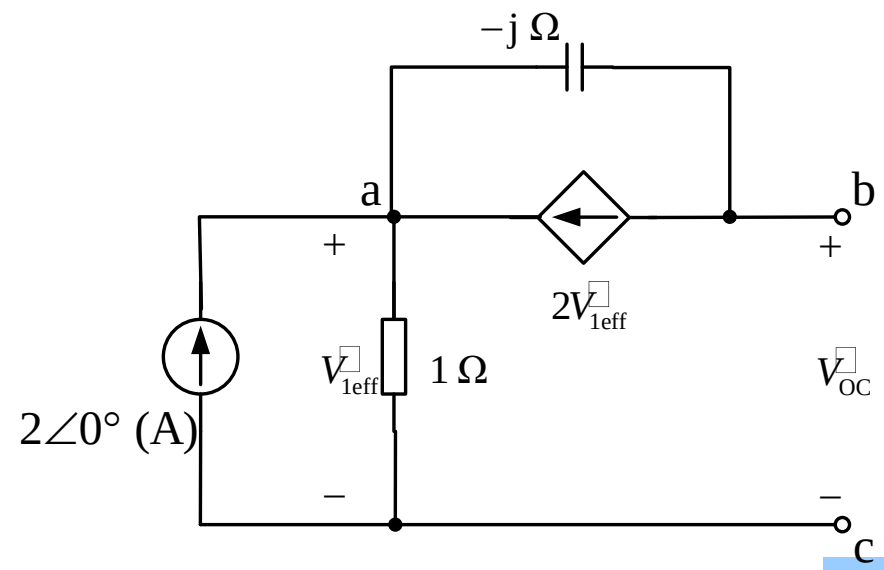

$$\dot{V}_{1eff} = 1 \times 2\angle 0° = 2 \text{ (V)}$$

$$\dot{V}_{OC} = \dot{V}_{1eff} + j2\dot{V}_{1eff} = 2 + j4 \text{ (V)}$$

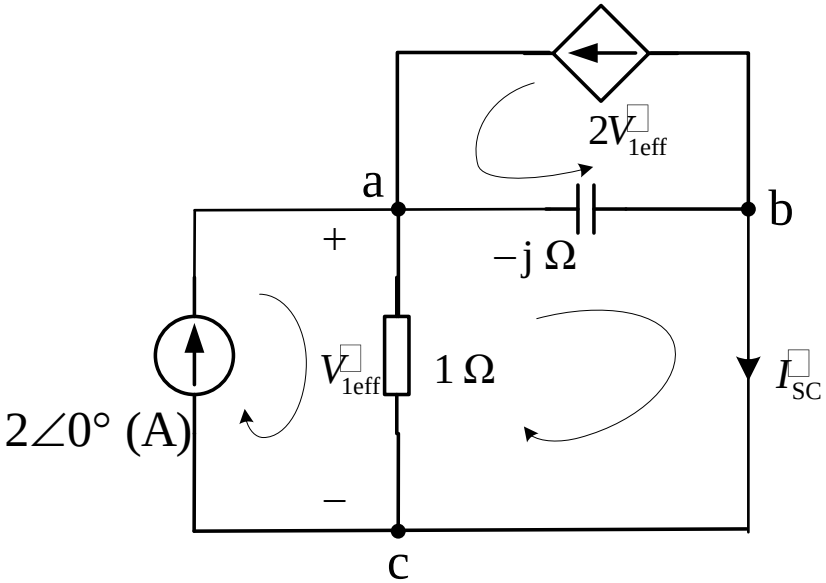

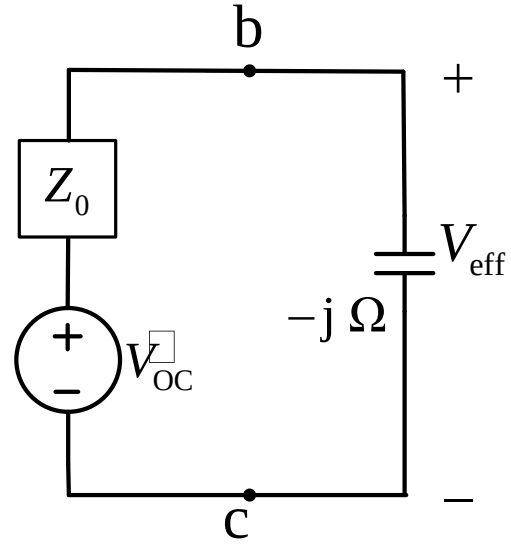

3. Find $\dot{I}_{SC}$ and Z_0.

$$\begin{cases} \dot{I}_{SC}(1-j)+2\dot{V}_{1eff}(-j)-2=0 \\ \dot{V}_{1eff}=1\times(2-\dot{I}_{SC}) \end{cases}$$

$$\dot{I}_{SC}(1-j)-j2(2-\dot{I}_{SC})-2=0$$

$$\dot{I}_{SC}=\frac{2+j4}{1+j}\ (A)$$

$$Z_0=\frac{\dot{V}_{OC}}{\dot{I}_{SC}}=\frac{2+j4}{(2+j4)/(1+j)}=1+j\ (\Omega)$$

4. Find $\dot{V}_{eff}$ in Thevenin equivalent circuit.

$$\dot{V}_{eff}=\dot{V}_{OC}\frac{-j}{Z_0-j}=(2+j4)\frac{-j}{1+j-j}$$

$$=4-2j=2\sqrt{5}\angle-26.6°(V)$$

5.Transform the resulting phasor to the time domain.

$$v(t)=2\sqrt{10}\cos(3t-26.6°)\ (V)$$

Alternative method to find Z_0:

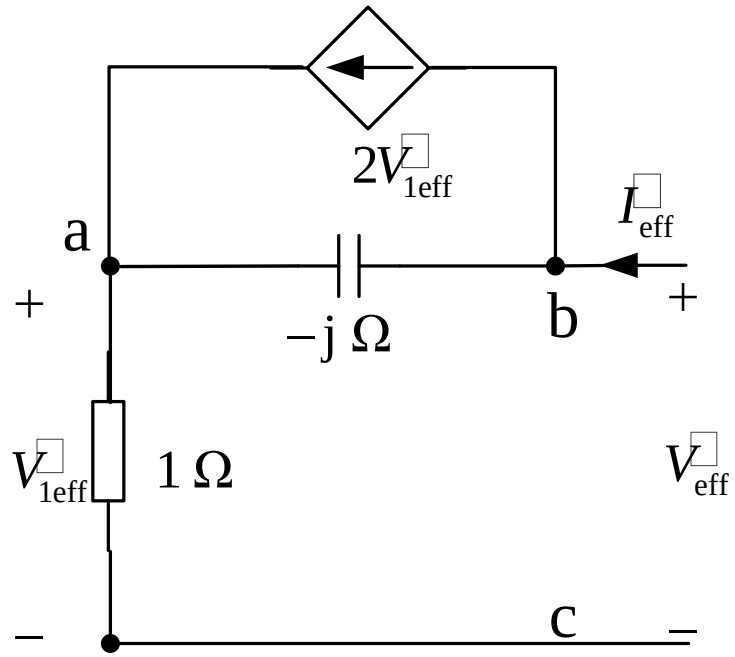

Kill the independent source and Assume

$$\dot{V}_{1\text{eff}} = 1\text{V}$$

$$\dot{I}_{\text{eff}} = \dot{I}_{1\text{eff}} = \frac{\dot{V}_{1\text{eff}}}{1} = 1\text{A}$$

$$\dot{V}_{\text{eff}} = (\dot{I}_{\text{eff}} - 2\dot{V}_{1\text{eff}})(-\text{j}) + \dot{V}_{1\text{eff}} = 1 + \text{j}$$

$$Z_0 = \frac{\dot{V}_{\text{eff}}}{\dot{I}_{\text{eff}}} = 1 + \text{j}\ (\Omega)$$

Op-Amp AC Circuits

The key to analyzing ideal op amp AC circuits: $i^+ = i^- = 0$; $v^+ = v^-$

Phase shifter **Design Z_1 and Z_2 so that $v_o = 2\cos(2000t - 90°)\text{V}$ for given input $v_s = 15\cos 2000t$ V. Only resistors and capacitors can be used to design Z_1 and Z_2.**

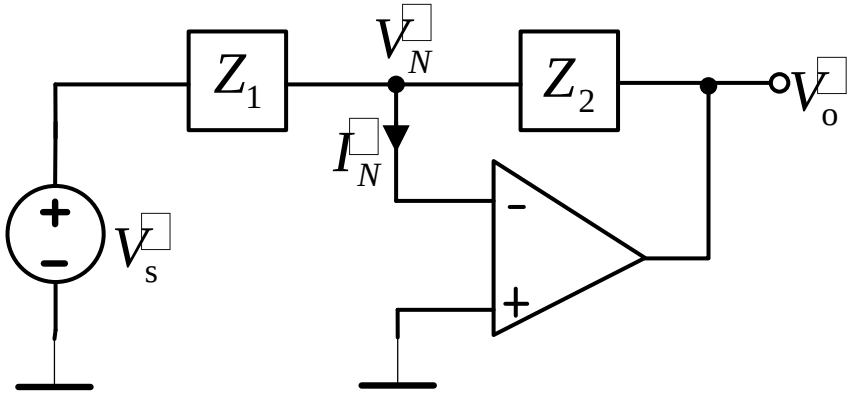

Solution: **1. Transform the circuit to the frequency domain.**

$$\dot{V}_s = 15\angle 0° = 15 \text{ V}$$

$$\dot{V}_o = 2\angle -90° = -j2 \text{ V}$$

2. The properties of ideal op amp give

$$\dot{V}_N = \dot{V}^- = \dot{V}^+ = 0$$

$$\dot{I}_N = 0$$

$$\dot{V}_s = 15\angle 0° = 15 \text{ V}$$

$$\dot{V}_o = 2\angle -90° = -j2 \text{ V}$$

$$\dot{V}_N = \dot{V}^- = \dot{V}^+ = 0$$

$$\dot{I}_N = 0$$

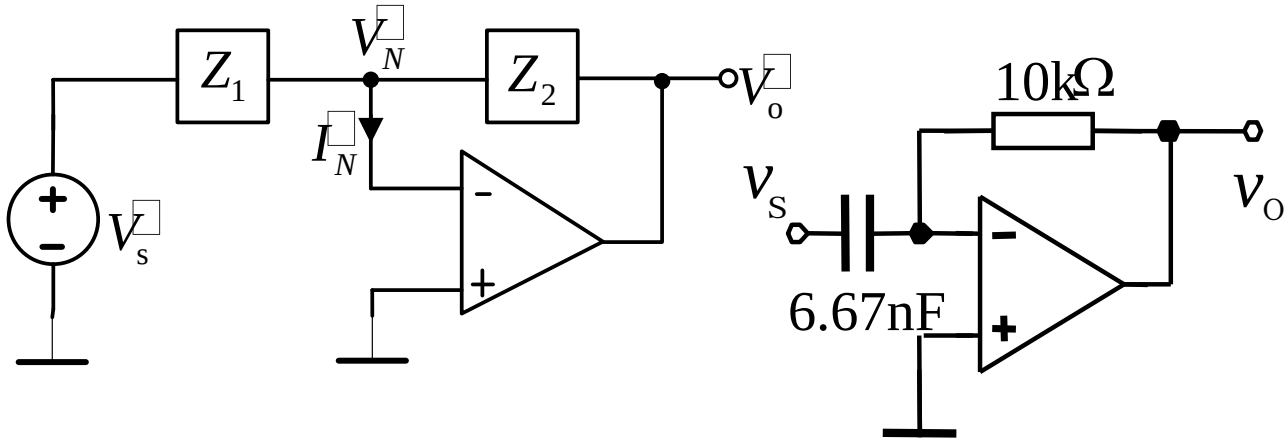

3. Apply nodal analysis at node N (input terminal of op amp)

$$\left(\frac{1}{Z_1}+\frac{1}{Z_2}\right)\dot{V}_N - \frac{1}{Z_1}\dot{V}_s - \frac{1}{Z_2}\dot{V}_o = 0 \quad \Rightarrow \quad \dot{V}_o = -\frac{Z_2}{Z_1}\dot{V}_s$$

Substituting $\dot{V}_s$ **and** $\dot{V}_o$ **into the Eq. above, yields**

$$-j2 = -\frac{Z_2}{Z_1}\cdot 15 \quad \Rightarrow \quad Z_1 = -j7.5Z_2$$

Try $Z_2 = R = 10\text{k}\Omega$ **, get** $\quad Z_1 = -j7.5\times 10^4 = -j\dfrac{1}{\omega C}$

$$\Rightarrow C = (7.5\times 10^4 \times 2000)^{-1} = 6.67\text{nF}$$

Sinusoidal Steady-State Circuit Analysis

- **Phasor Analysis for Complex Circuits**
- **AC Circuit Power Analysis**

  Maximum Power Transfer

AC Circuit Power Analysis

Instantaneous and Average Power

Instantaneous Power(W)

$$p(t) = v(t)i(t)$$

Average Power(W)

$$P = \frac{1}{T}\int_T p(t)\mathrm{d}t$$

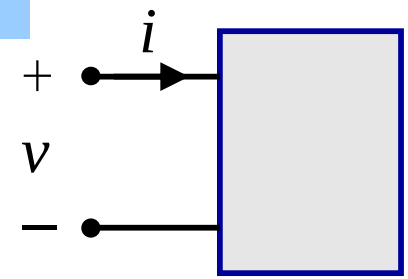

For basic elements $i(t) = I_{\mathrm{m}} \sin \omega t$

R $\quad p(t) = Ri^2 = \dfrac{v^2}{R}$

$$P = \frac{1}{2}RI_{\mathrm{m}}{}^2 = \frac{V_{\mathrm{m}}{}^2}{2R}$$

$$= RI_{\mathrm{eff}}{}^2 = \frac{V_{\mathrm{eff}}{}^2}{R}$$

L $\quad p(t) = Li\dfrac{\mathrm{d}i}{\mathrm{d}t}$ $\qquad P = 0$

C $\quad p(t) = Cv\dfrac{\mathrm{d}v}{\mathrm{d}t}$ $\qquad P = 0$

Reactive Power

Instantaneous Power

L $$p(t) = Li\frac{\mathrm{d}i}{\mathrm{d}t}$$

C $$p(t) = Cv\frac{\mathrm{d}v}{\mathrm{d}t}$$

Reactive Power (Var)

$$Q_{\mathrm{L}} = p(t)\big|_{\mathrm{m}} = V_{\mathrm{eff}} I_{\mathrm{eff}}$$

$$= \omega L I_{\mathrm{eff}}{}^{2} = X_{\mathrm{L}} I_{\mathrm{eff}}{}^{2}$$

$$Q_{\mathrm{C}} = p(t)\big|_{\mathrm{m}} = -V_{\mathrm{eff}} I_{\mathrm{eff}}$$

$$= -I_{\mathrm{eff}}{}^{2} / \omega C = X_{\mathrm{C}} I_{\mathrm{eff}}{}^{2}$$

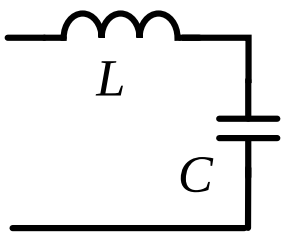

$$i(t) = I_{\mathrm{m}} \sin \omega t$$

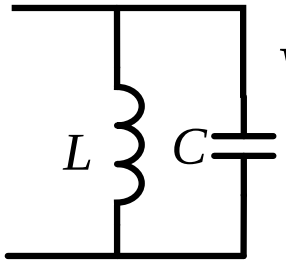

$$v(t) = V_{\mathrm{m}} \sin \omega t$$

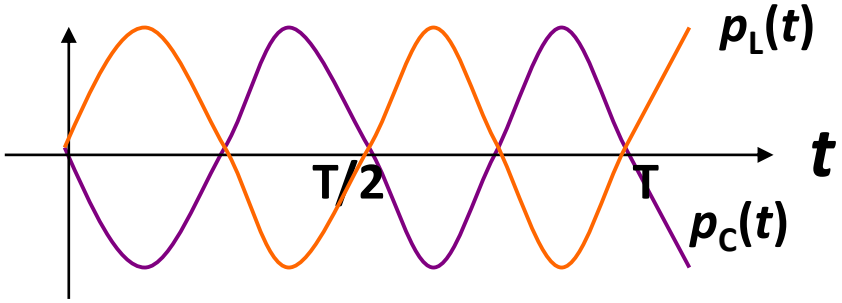

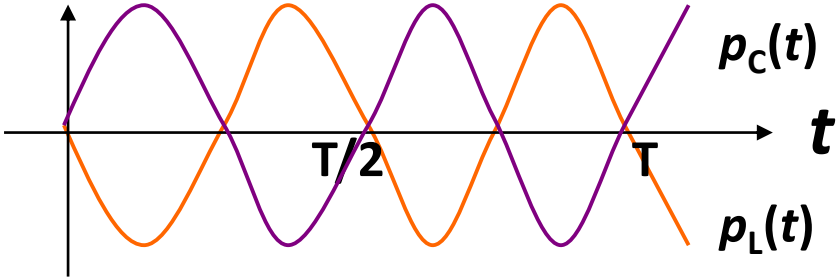

Summery

Instantaneous Power (W)

is the power at any instant of time. It is the rate at which an element absorbs energy. It is difficult to measure.

Average Power(W)

The average power is the average of the instantaneous power over one period. It is more convenient to measure. The instrument for measuring power is wattmeter.

Reactive Power (Var)

The reactive power is the maximum value of the instantaneous power for an inductor or a capacitor.

$$Q_L \geq 0, \quad Q_C \leq 0$$

Instantaneous and Average Power

Average Power in Sinusoidal Steady-state circuit

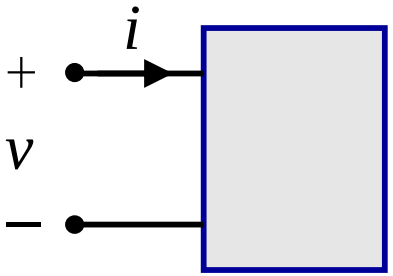

$$v(t) = V_{\mathrm{m}} \cos(\omega t + \theta_v)$$

$$i(t) = I_{\mathrm{m}} \cos(\omega t + \theta_i)$$

$$p(t) = V_{\mathrm{m}} I_{\mathrm{m}} \cos(\omega t + \theta_v) \cos(\omega t + \theta_i)$$

$$p(t) = \frac{1}{2} V_{\mathrm{m}} I_{\mathrm{m}} \cos(\theta_v - \theta_i) + \frac{1}{2} V_{\mathrm{m}} I_{\mathrm{m}} \cos(2\omega t + \theta_v + \theta_i)$$

$$P = \frac{1}{2} V_{\mathrm{m}} I_{\mathrm{m}} \cos(\theta_v - \theta_i) = V_{\mathrm{eff}} I_{\mathrm{eff}} \cos \varphi_Z$$

Apparent Power and Power Factor

From average power,

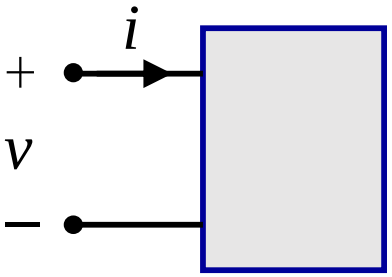

$$P = \frac{1}{2} V_{\mathrm{m}} I_{\mathrm{m}} \cos(\theta_v - \theta_i) = V_{\mathrm{eff}} I_{\mathrm{eff}} \cos\varphi_Z = S\cos\varphi_Z$$

define $S = V_{\mathrm{eff}} I_{\mathrm{eff}}$ — Apparent power (VA)

$$\mathrm{pf} = \frac{P}{S} = \cos\varphi_Z = \cos(\theta_v - \theta_i)$$ — Power factor

$$\varphi_Z = \theta_v - \theta_i$$ — Power factor angle

$\varphi_Z = \theta_v - \theta_i < 0$ capacitive pf — Leading power factor

$\varphi_Z = \theta_v - \theta_i > 0$ inductive pf — Lagging power factor

$\varphi_Z = \theta_v - \theta_i = 0$ resistive pf = 1, $S = P$

Complex Power (the coined term)

For a given load Z,

$$\dot{V}_m = V_m \angle \theta_v \qquad \dot{I}_m = I_m \angle \theta_i$$

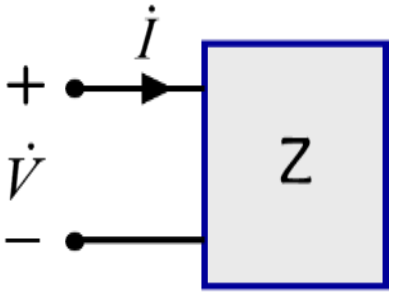

Define complex power:

$$\boxed{\dot{S} = \frac{1}{2}\dot{V}_m \dot{I}_m^* = \dot{V}_{eff}\dot{I}_{eff}^*} = Z\dot{I}_{eff}\dot{I}_{eff}^* = (R + jX)I_{eff}^2 \boxed{= P + jQ}$$

$$= \frac{1}{2}V_m I_m[\cos(\theta_v - \theta_i) + j\sin(\theta_v - \theta_i)]$$

$$\boxed{P = V_{eff} I_{eff} \cos\varphi_Z = \mathrm{Re}[\dot{S}] = RI_{eff}^2}$$

$$\boxed{Q = V_{eff} I_{eff} \sin\varphi_Z = \mathrm{Im}[\dot{S}] = XI_{eff}^2}$$

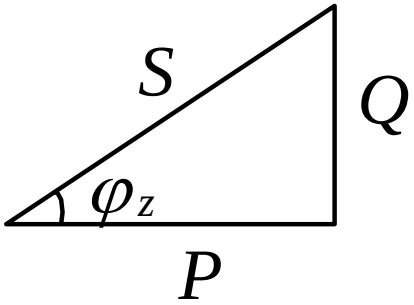

Conservation of AC power

For loads Z_1 and Z_2 in series connection,

$$S = \frac{1}{2}\dot{V}_m \dot{I}_m^* = \frac{1}{2}(\dot{V}_{1m} + \dot{V}_{2m})\dot{I}_m^*$$

$$= \frac{1}{2}\dot{V}_{1m}\dot{I}_m^* + \frac{1}{2}\dot{V}_{2m}\dot{I}_m^* = \dot{S}_1 + \dot{S}_2$$

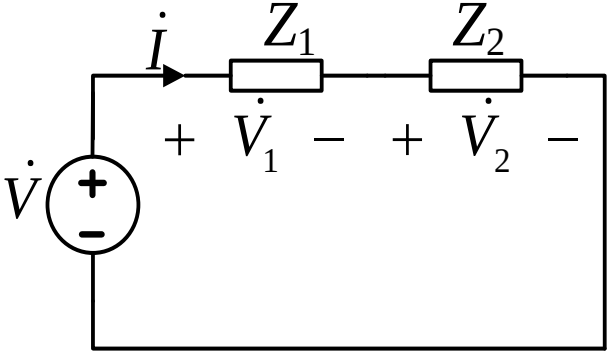

For loads Z_1 and Z_2 in parallel connection,

$$S = \frac{1}{2}\dot{V}_m \dot{I}_m^* = \frac{1}{2}\dot{V}_m (\dot{I}_{1m}^* + \dot{I}_{2m}^*)$$

$$= \frac{1}{2}\dot{V}_m \dot{I}_{1m}^* + \frac{1}{2}\dot{V}_m \dot{I}_{2m}^* = \dot{S}_1 + \dot{S}_2$$

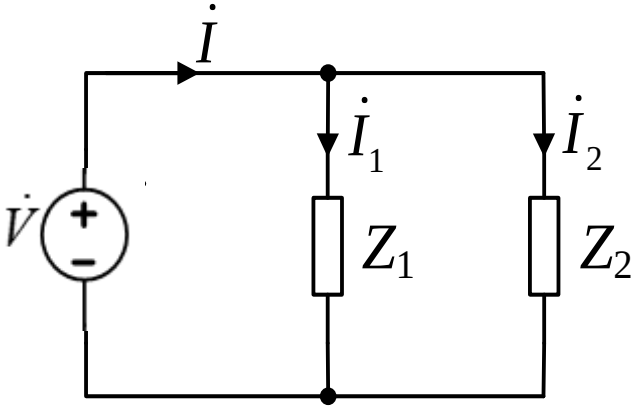

In general, $\boxed{\dot{S} = \sum \dot{S}_k}$ $\boxed{P = \sum P_R}$ $\boxed{Q = \sum Q_L - \sum |Q_C|}$

Power Analysis

Example Given voltage and current for the network

$$v(t) = 120\cos(314t + 45°)\ \text{V}$$

$$i(t) = 10\cos(314t - 10°)\ \text{A}$$

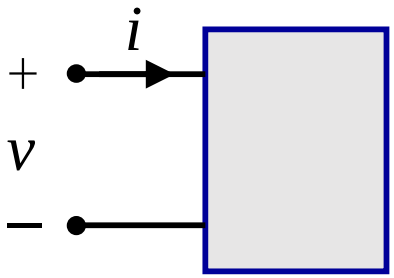

Find the average power.

$$P = \frac{1}{2}V_{\text{m}}I_{\text{m}}\cos(\theta_v - \theta_i) = \frac{1}{2}\times 120\times 10\cos(45° + 10°)$$

$$P = 600\cos 55° = 344.2\ \text{W}$$

Power Analysis

Example Given that $Z = 4 + j3\ \Omega$ $\dot{V} = 10\angle 0°\ \text{V}$

Find average power absorbed by Z.

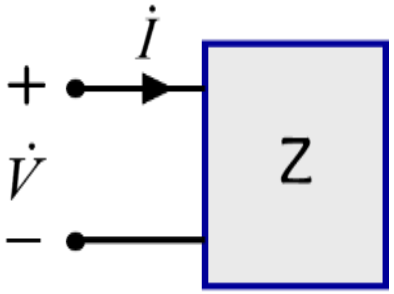

Solution 1.

$$\dot{I} = \frac{\dot{V}}{Z} = \frac{10}{4 + j3} = 2\angle -36.9°\ \text{A}$$

$$P = \frac{1}{2} V_m I_m \cos(\theta_v - \theta_i)$$

$$P = \frac{1}{2} \times 10 \times 2 \cos(36.9°) = 10 \times \frac{4}{5} = 8\ \text{W}$$

Solution 2. $P = \frac{1}{2} I^2 R = \frac{1}{2} 2^2 \times 4 = 8\ \text{W}$

Power Analysis

Example Given that $Z = 4 + \mathrm{j}3\ \Omega$ $\dot{V} = 10\angle 0^\circ\ \mathrm{V}$ (V_m)

Find average power absorbed by Z.

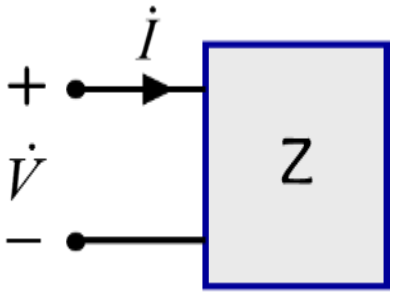

Solution 3.

$$P = \frac{1}{2}\mathrm{Re}[\dot{V}\dot{I}^*] = \frac{1}{2}\mathrm{Re}[\dot{V}\frac{\dot{V}^*}{Z^*}]$$

$$= \frac{1}{2}V^2\,\mathrm{Re}[\frac{1}{Z^*}] = \frac{100}{2}\mathrm{Re}[\frac{1}{4-\mathrm{j}3}]$$

$$= 50\,\mathrm{Re}[\frac{4+\mathrm{j}3}{25}] = 50 \times \frac{4}{25} = 8\ \mathrm{W}$$

Note : $P \neq \dfrac{V_{\mathrm{eff}}^2}{R} = \dfrac{100}{4}$ $P = \dfrac{V_{\mathrm{R\ eff}}^2}{R}$

Power Factor Correction

Source: V=220V， f =50Hz
Load: I=0.4A， P=40W
Find S,Q and cosφ.

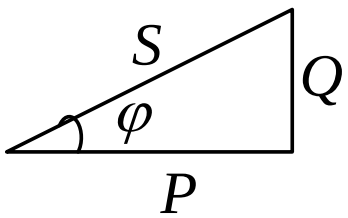

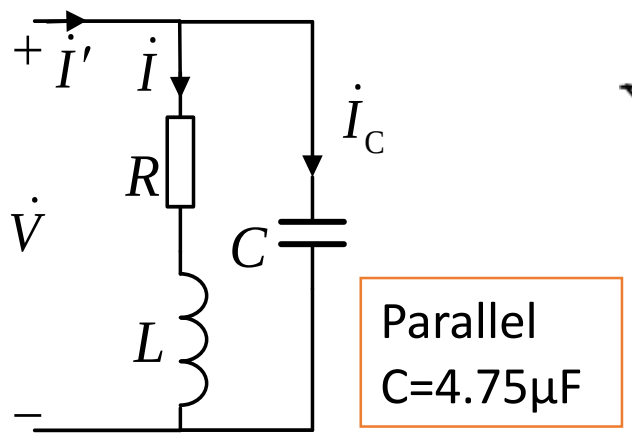

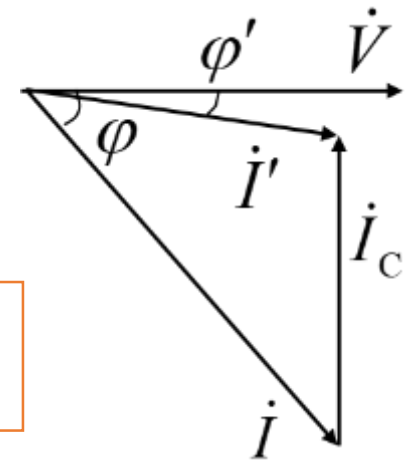

$$S = VI = 220 \times 0.4 = 88\,\text{VA}$$

$$\lambda = \cos\varphi = \frac{P}{S} = 0.455$$

$$\varphi = \cos^{-1} 0.455 = 63^\circ$$

$$Q = S \times \sin\varphi = 78.4\text{var}$$

$$\dot{I} = 0.4\angle -63^\circ = 0.182 - \text{j}0.356\text{A}$$

$$\dot{I}_\text{C} = \text{j}\omega C\dot{V} = \text{j}0.328\text{A}$$

$$\dot{I}' = \dot{I} + \dot{I}_\text{C} = 0.184\angle -8.75^\circ\,\text{A}$$

$$\varphi' = 8.75^\circ$$

$$\lambda' = \cos\varphi' = \cos 8.75^\circ = 0.99$$

$$S' = VI' = 40.5\text{VA}$$

$$Q' = S' \cdot \sin\varphi' = 6.18\text{var}$$

Maximum Power Transfer

Consider a practical source or Thevenin circuit connected with a load in which

$$Z_S = R_S + jX_S$$

$$Z_L = R_L + jX_L$$

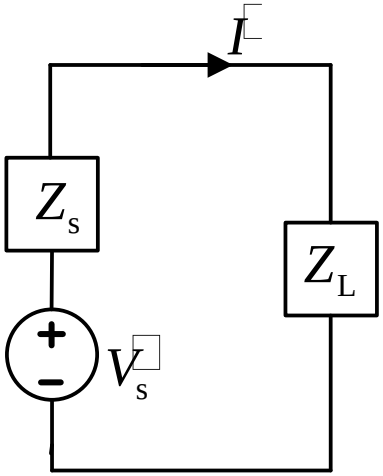

We can get the current through the load

$$\dot{I} = \frac{\dot{V}_S}{(R_S + R_L) + j(X_S + X_L)}$$

The average power delivered to the load is

$$P = I^2 R_L = \frac{V_S^{\,2} R_L}{(R_S + R_L)^2 + (X_S + X_L)^2}$$

Note *I* here is I_{eff}

Maximum Power Transfer

$$P = I_{\text{eff}}{}^2 R_{\text{L}} = \frac{V_{\text{S}}{}^2 R_{\text{L}}}{(R_{\text{S}} + R_{\text{L}})^2 + (X_{\text{S}} + X_{\text{L}})^2}$$

Case 1. Conjugate Match

When $X_{\text{L}} = -X_{\text{S}}$ **obtain** $P = \dfrac{V_{\text{S}}{}^2 R_{\text{L}}}{(R_{\text{S}} + R_{\text{L}})^2}$

When $R_{\text{L}} = R_{\text{S}}$ $\Rightarrow$ $P_{\max} = \dfrac{V_{\text{S}}{}^2}{4R_{\text{S}}}$

Conclusion: $Z_{\text{L}} = Z_{\text{S}}^*$

$$P_{\max} = \frac{V_{\text{eff OC}}{}^2}{4R_0} \quad \textbf{or} \quad P_{\max} = \frac{V_{\text{mOC}}{}^2}{8R_0}$$

Maximum Power Transfer

Case 2. Magnitude Match

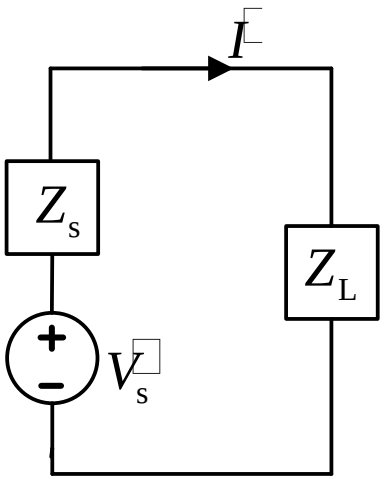

When $Z_L = |Z_L| \angle \varphi$

where $|Z_L|$ **is changeable and** φ **unchangeable**

The average power delivered to the load is

$$P = I_{eff}^{\ 2} |Z_L| \cos\varphi$$

Only when $|Z_L| = |Z_S|$

Z_L can obtain maximum power P_{max}

$$P = I_{eff}^{\ 2} R_L = \frac{V_S^{\ 2} R_L}{(R_S + R_L)^2 + (X_S + X_L)^2}$$

Maximum Power Transfer

Guide to Derivation *:

Assume $Z_L = |Z_L| \angle \varphi \qquad Z_S = |Z_S| \angle \varphi_S$

$$P = I_{\text{eff}}{}^2 \, |Z_L| \cos\varphi = \frac{V_S^2 \, |Z_L| \cos\varphi}{|Z_S + Z_L|^2} = \frac{V_S^2 \, |Z_L| \cos\varphi}{(Z_S + Z_L)(Z_S + Z_L)^*}$$

$$= \frac{V_S^2 \, |Z_L| \cos\varphi}{|Z_S|^2 + |Z_L|^2 + 2\,\mathrm{Re}\{Z_L Z_S^*\}} = \frac{V_S^2 \, |Z_L| \cos\varphi}{|Z_S|^2 + |Z_L|^2 + 2\,|Z_S| \cdot |Z_L| \cos(\varphi - \varphi_S)}$$

Let $\dfrac{\partial P}{\partial |Z_L|} = 0$ **obtain** $\boxed{|Z_L| = |Z_S|}$

$$P = I_{\text{eff}}{}^2 R_L = \frac{V_S{}^2 R_L}{(R_S + R_L)^2 + (X_S + X_L)^2}$$

Example

For the circuit shown below, (1) find the load impedance Z_L that absorbs the maximum average power. Calculate that maximum average power $P_{max.}$ (2) if $Z_L = R_L$, find R_L and $P_{max.}$

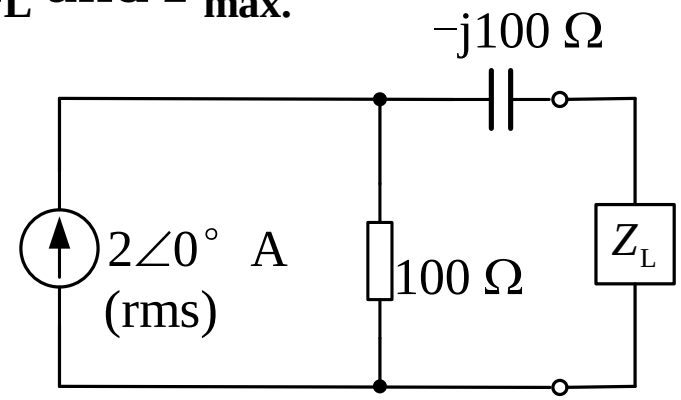

Solution: $\dot{V}_{OC} = 100 \times 2\angle 0^\circ = 200\angle 0^\circ \text{V}$

$$Z_0 = 100 - \text{j}100$$

$$= 100\sqrt{2}\angle -45^\circ \ \Omega$$

（1）**when** $Z_L = Z_0^* = 100 + \text{j}100\ \Omega$ **，conjugate match**

$$P_{max} = \frac{V_{OC}^{\ 2}}{4R_0} = 100 \quad \text{W}$$

（2）**when** $R_L = |Z_0| = 100\sqrt{2} \quad \Omega$ **, the load obtain magnitude match**

$$\dot{V}_L = \dot{V}_{OC} \times \frac{R_L}{Z_0 + R_L} = 108\angle 22.5^\circ \quad \text{V} \qquad P'_{max} = \frac{V_L^{\ 2}}{R_L} = 82.3\ \text{W}$$

Prob.

1-1， 1-2， 1-3， 1-4， 1-5， 1-6
1-7， 1-8， 1-9， 1-10， 1-11